Functional
External Shutters

Call us on **01276 470 192**

Decorative Shutters

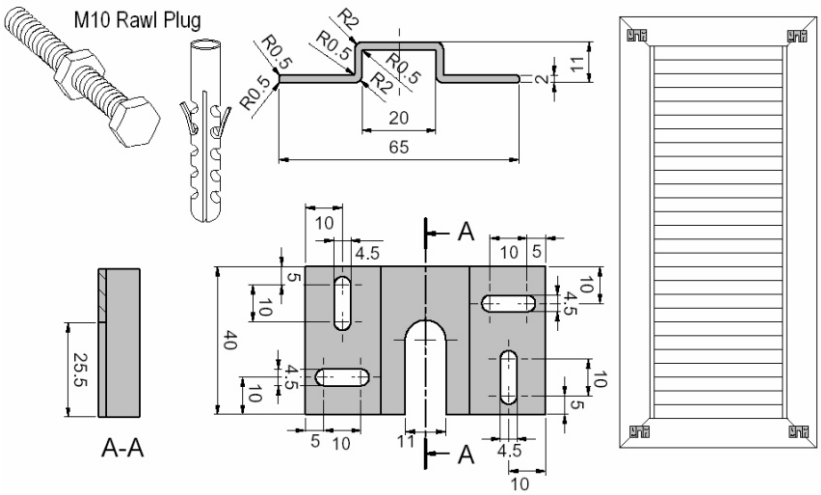

MS Panel

PARIS Panel

SR Panel

LYON-Z Panel

Drawing not to SCALE FOR ILLUSTRATION PURPOSES ONLY

© 2008 Designed by Creative Hand. All rights reserved.